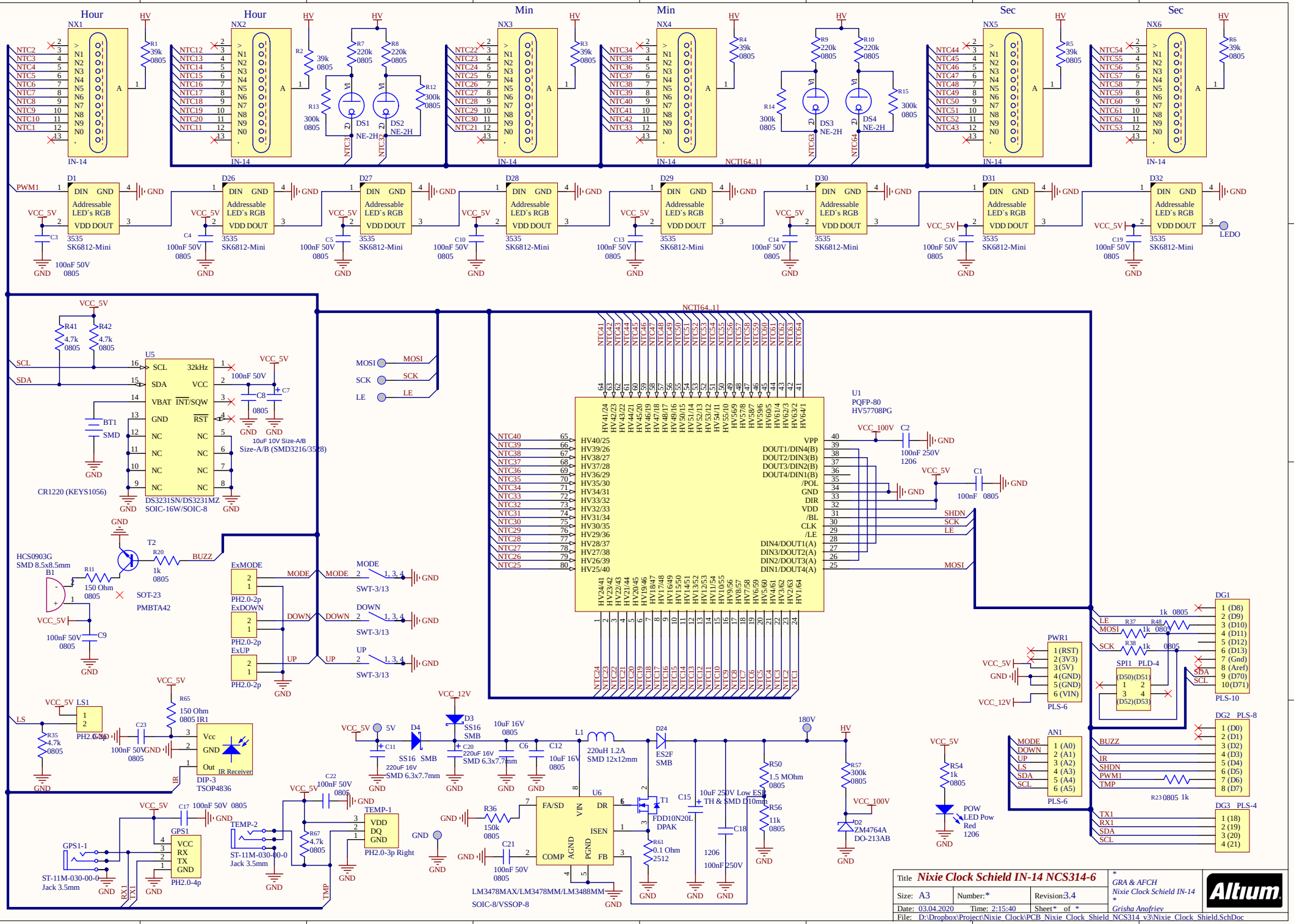
Hour
Hour
Min
Min
Sec
Sec
NX1
NX2
NX3
NX4
NX5
NX6
IN-14
NCT[64..1]
D1
D26
D27
D28
D29
D30
D31
D32
Addressable LED`s RGB
3535
SK6812-Mini
LEDO
U5
DS3231SN/DS3231MZ
SOIC-16W/SOIC-8
CR1220 (KEYS1056)
10uF 10V Size-A/B
Size-A/B (SMD3216/3528)
U1
PQFP-80
HV57708PG
HCS0903G
SMD 8.5x8.5mm
SOT-23
PMBTA42
ExMODE
ExDOWN
ExUP
PH2.0-2p
SWT-3/13
DIP-3
TSOP4836
IR Receiver
PH2.0-4p
ST-11M-030-00-0
Jack 3.5mm
TEMP-1
TEMP-2
PH2.0-3p Right
SS16 SMB
SMD 6.3x7.7mm
220uH 1.2A
SMD 12x12mm
ES2F
SMB
FDD10N20L
DPAK
LM3478MAX/LM3478MM/LM3488MM
SOIC-8/VSSOP-8
ZM4764A
DO-213AB
POW
LED Pow
Red
1206
PWR1
PLS-6
AN1
PLS-6
DG1
PLS-10
DG2 PLS-8
DG3 PLS-4
SPI1 PLD-4
Title Nixie Clock Schield IN-14 NCS314-6
Size: A3
Number:*
Revision:3.4
Date: 03.04.2020
Time: 2:15:40
Sheet* of *
File: D:\Dropbox\Project\Nixie_Clock\PCB_Nixie_Clock_Shield_NCS314_v3\Nixie_Clock_Shield.SchDoc
GRA & AFCH
Nixie Clock Schield IN-14
Grisha Anofriev
Altium