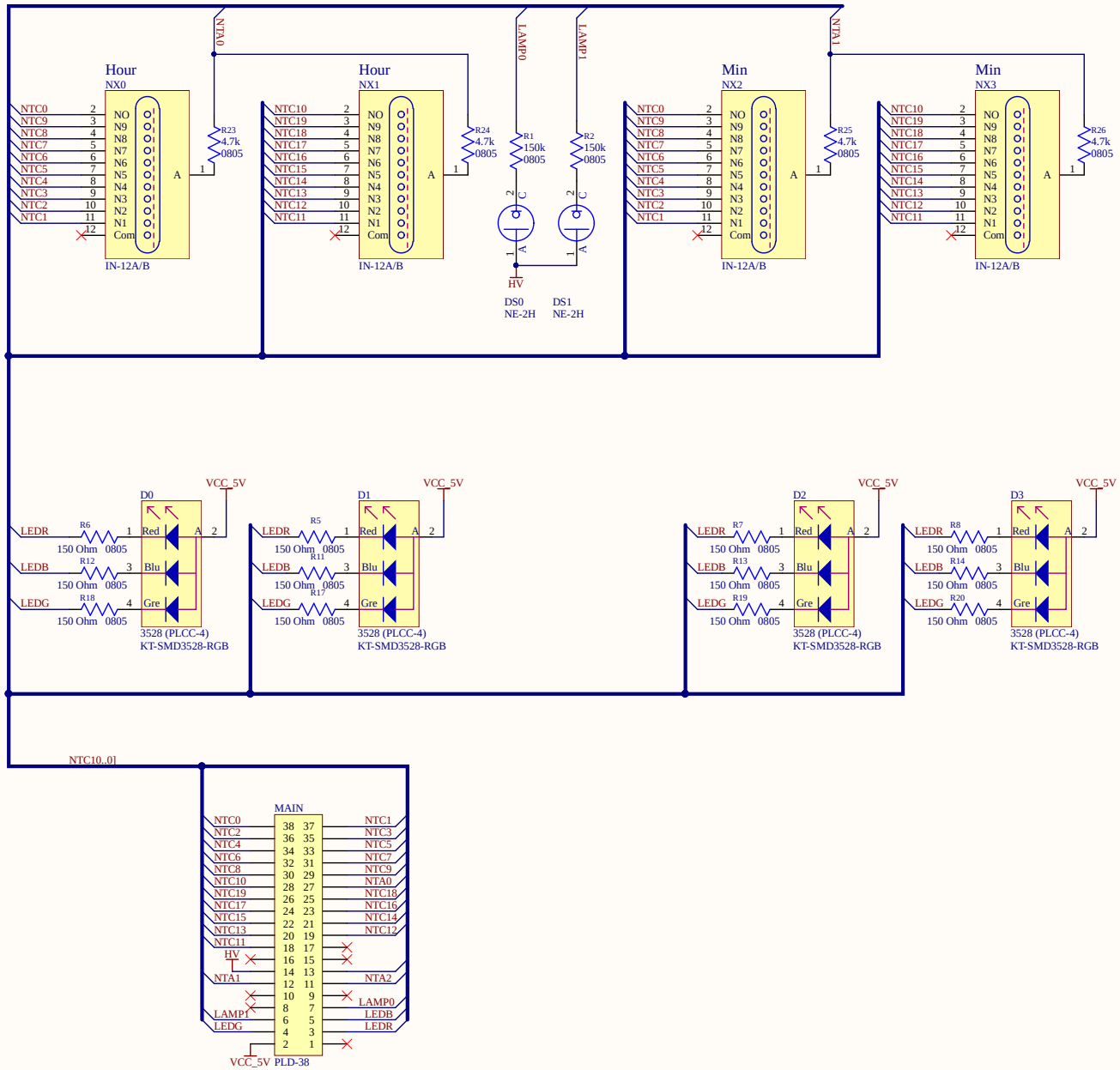

Title	*Nixie Clock Tube NCT412-4 (IN-12A/B)*		* GRA & AFCH Nixie Tube IN-12A/B www.gra-afch.com Grisha Anofriev
Size: A3	Number:*	Revision:1.0	
Date: 12.04.2021	Time: 20:30:09	Sheet* of *	
File: C:\Dropbox\PCB_Nixie_Clock_Tube_NCT412-4\Nixie_Clock_Tube.SchDoc			