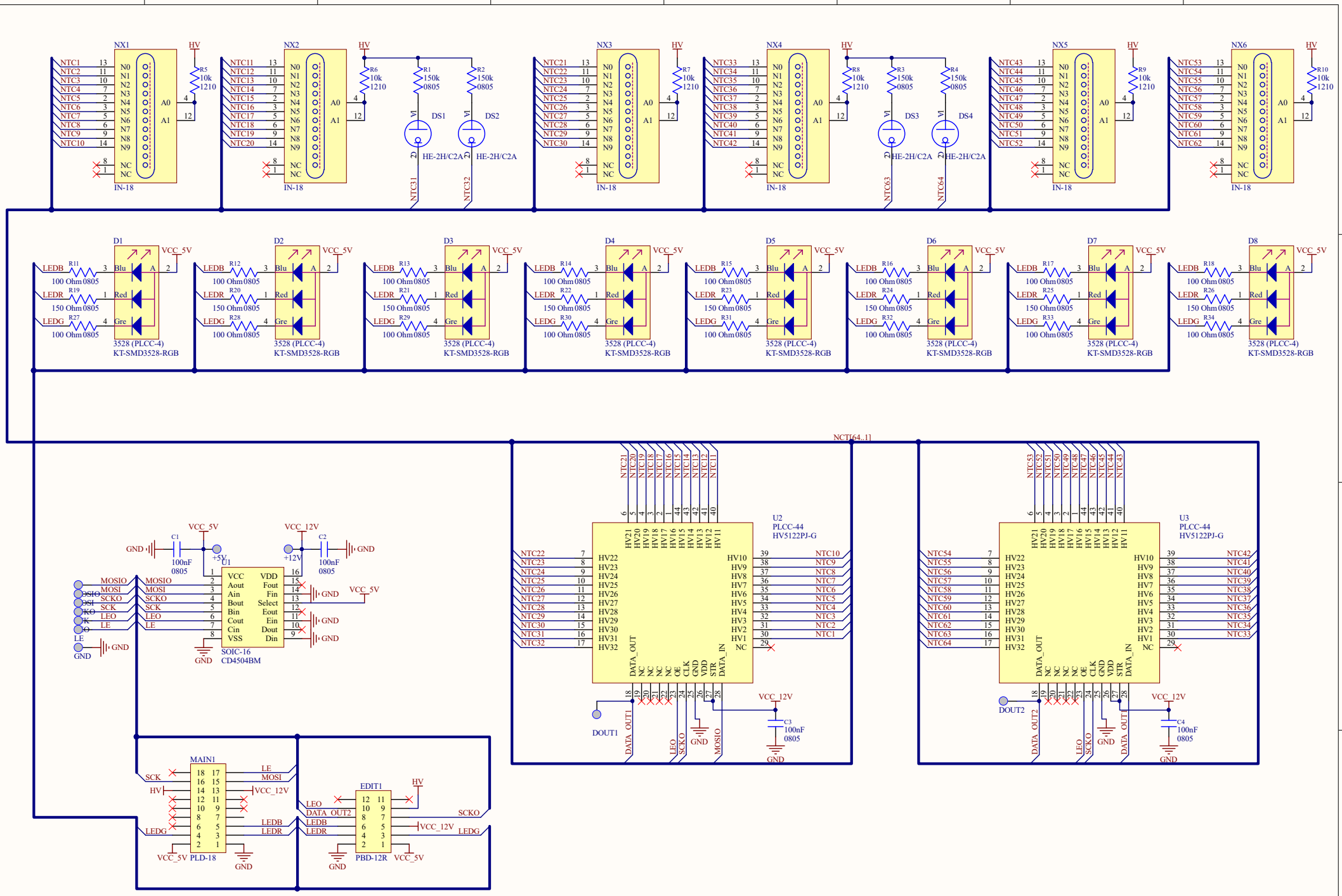

Title	*Nixie Clock Tube NCT318*		* GRA&AFCH * * Grisha Anofriev
Size: A3	Number:*	Revision:1.1	
Date: 19.05.2017	Time: 21:45:14	Sheet* of *	
File: D:\Dropbox\Project\Nixie Clock\PCB Nixie Clock Tube NCT318\Nixie Clock Tube.SchDoc			