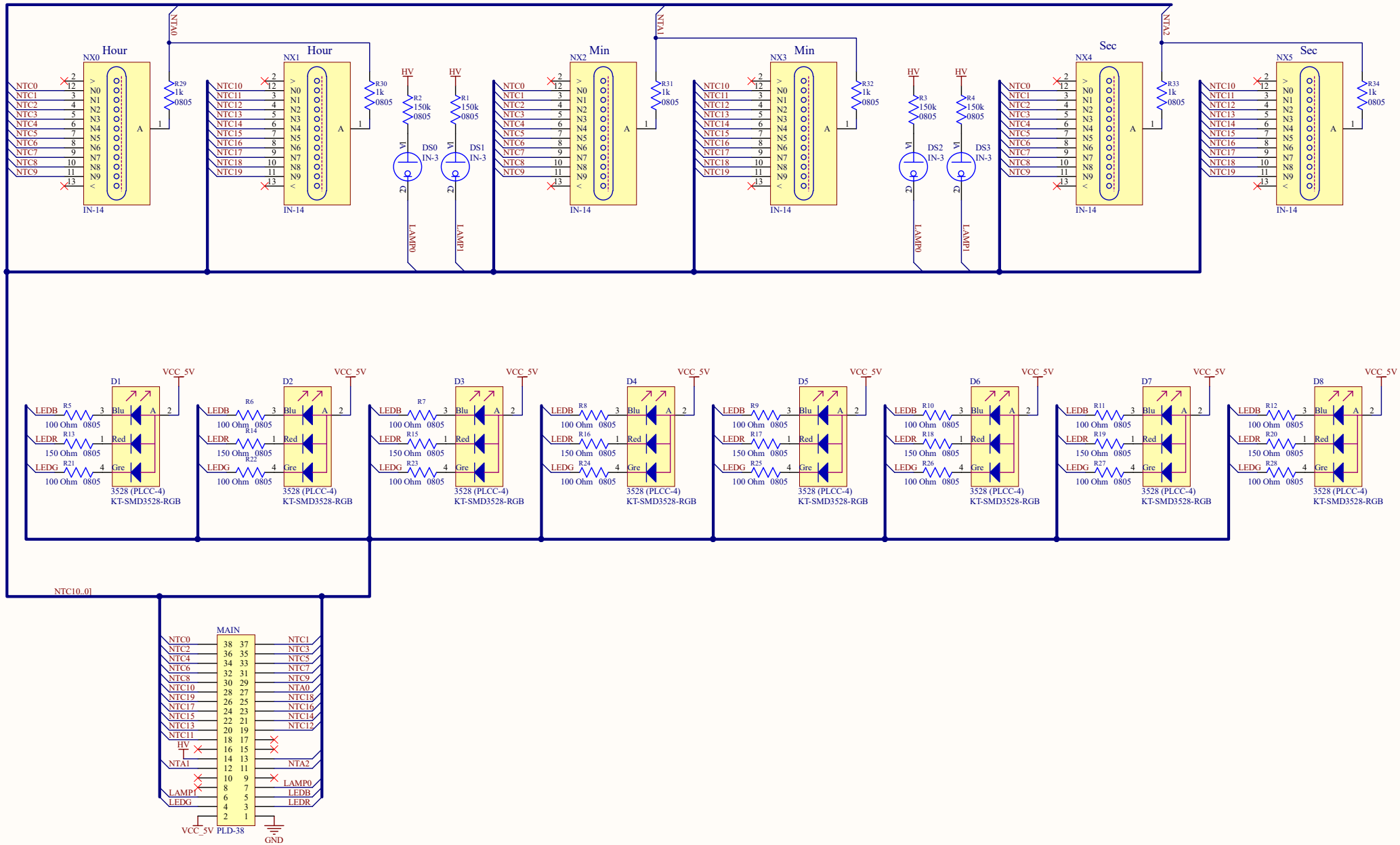

Title	*Nixie Clock Tube NCT414*		* GRA & AFCH Nixie Tube IN-14 * Grisha Anofriev
Size: A3	Number:*	Revision:1.1	
Date: 25.04.2017	Time: 19:15:35	Sheet* of *	
File: D:\Dropbox\Project\Nixie Clock\PCB Nixie Clock Tube NCT414\Nixie Clock Tube.SchDoc			