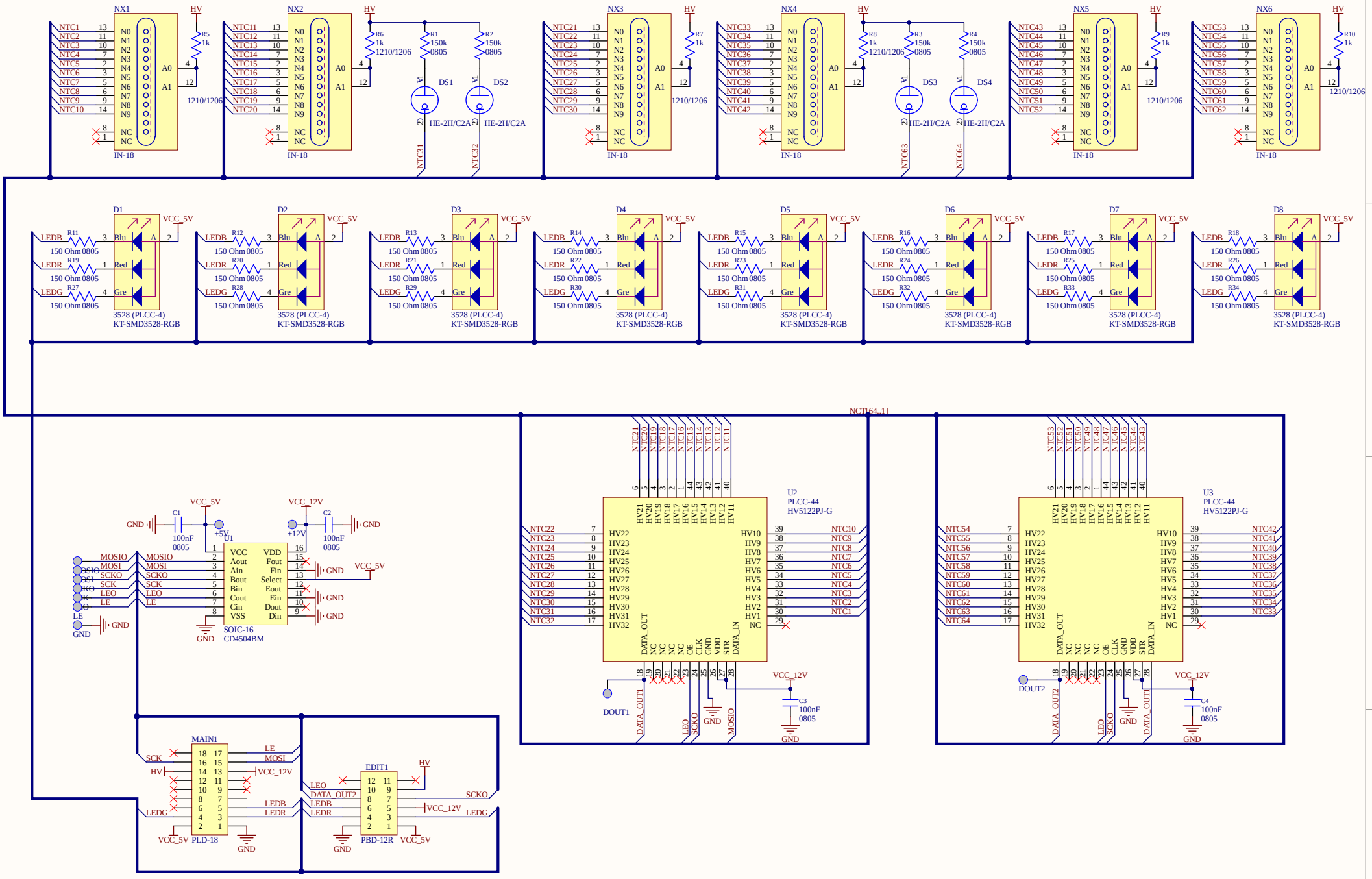

Title *Nixie Clock Tube NCT318*		* GRA&AFCH * *
Size: A3	Number:*	Revision:1.1 1K
Date: 12.09.2018	Time: 13:23:15	Sheet* of *
File: D:\Dropbox\Project\Nixie_Clock\PCB_Nixie_Clock_Tube_NCT318\Nixie_Clock_Tube.SchDoc		

Grisha Anofriev

Altium