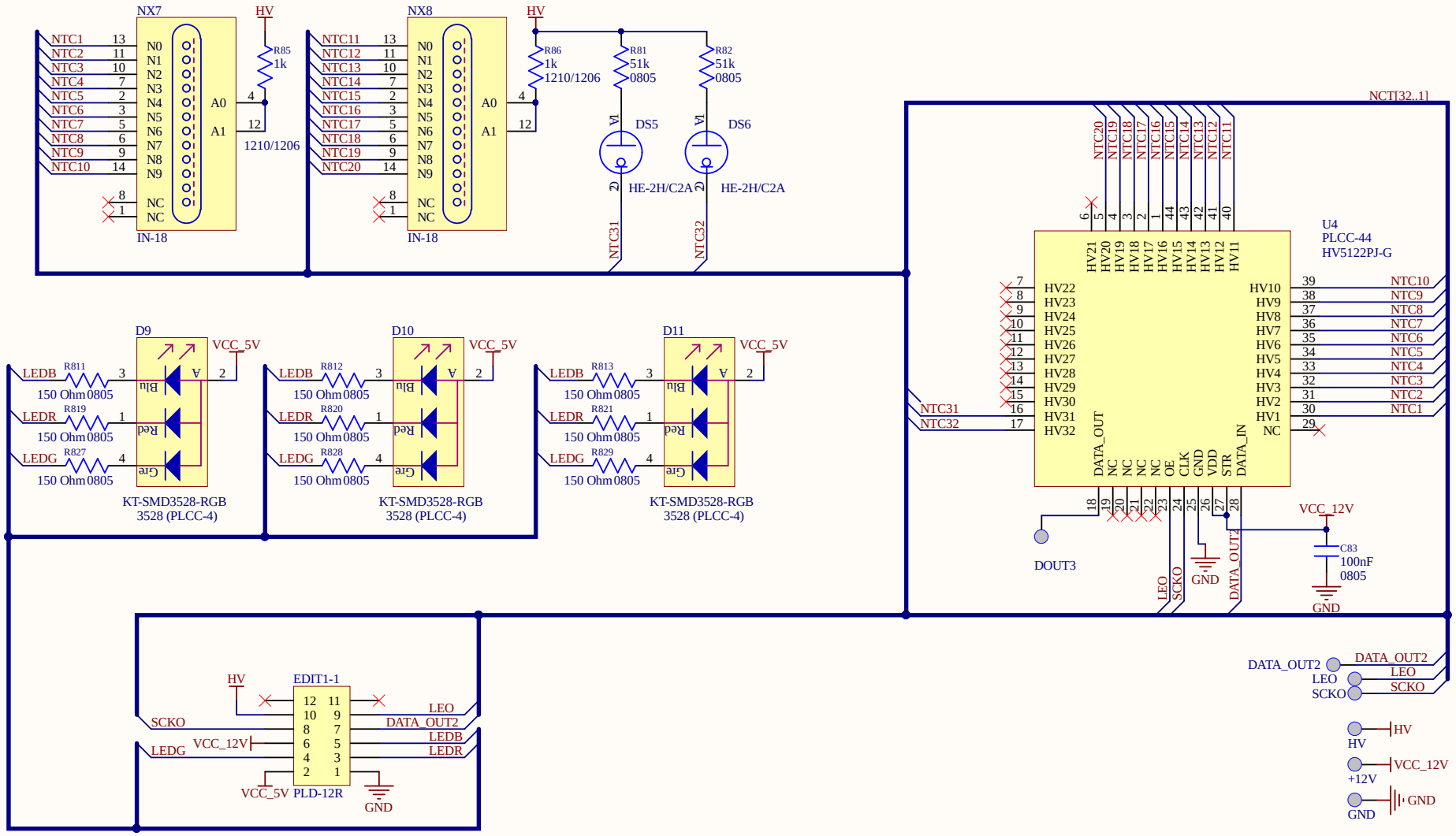

Title	*Nixie Clock Tube NCT818*		* GRA&AFCH * *
Size: A4	Number:*	Revision:1.0 B4	
Date: 21-Dec-18	Time: 19:24:23	Sheet * of *	*Grisha Anofriev*
File: C:\Users\GRA\Dropbox\Project\Nixie_Clock\PCB_Nixie_Clock_Tube_NCT818\Nixie_Clock_Tube.SchDoc			